VERONA GUEST CHAIR – BLACK

FEATURES

- Optional black or timber finish
- Plywood inner structure
- High density foam
- Steel frame
- Available in local fabrics
- 5-year warranty
- Weight limit is 130kg

OPTIONAL

- Optional frame or base colour – Additional Cost & Lead time.

Technical Specifications

All dimensions are nominal and subject to change without notice

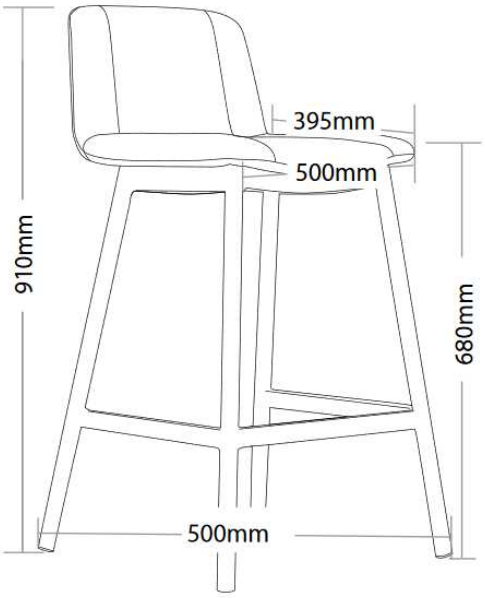

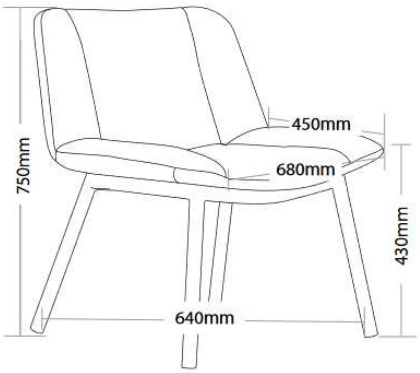

Verona is available in other options:

Verona Stool – Black

Verona Stool – Natural

Verona – Black Base

Verona – Natural